Windemere Condominiums Roof Replacement (Buildings One and Two)

DRAWING INDEX

C001	COVER SHEET
A101	ROOF PLANS
A501	R00F DETAILS

PROJECT LOCATION

PROJECT LOCATION:
WINDEMERE CONDOMINIUMS
931 SPRINNAKERS REACH DRIVE
PONTE VEDRA, FL 32082

Project Number
Date

Project Number
Issue Date

5/9/2024 7:08:48 PM

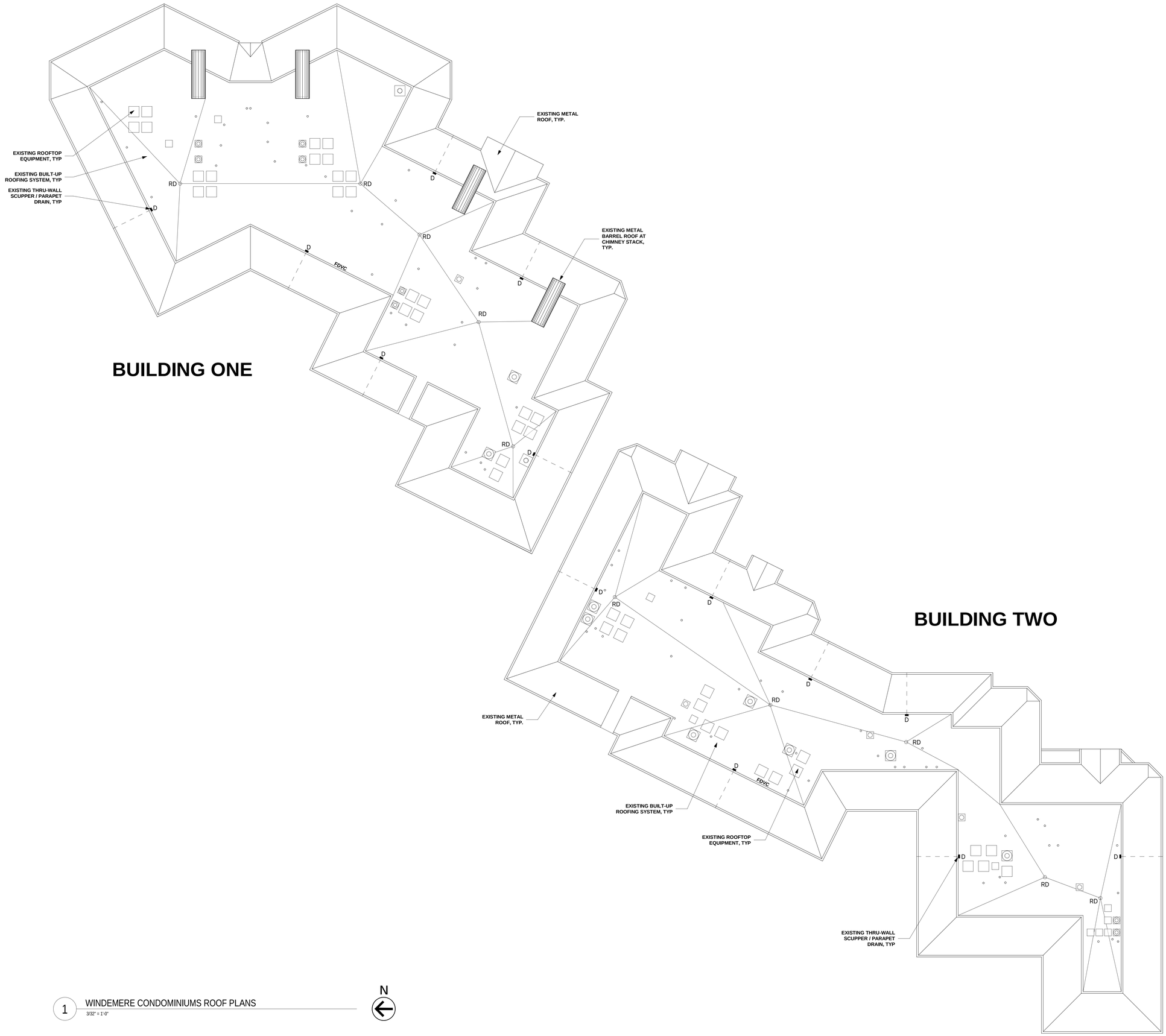

1 WINDEMERE CONDOMINIUMS ROOF PLANS
3/32" = 1'-0"

N

No.	Description	Date

Windemere Condominiums Roof Replacement (Buildings One and Two)

ROOF PLANS

Project Number	Project Number
Date	Issue Date
Drawn By	Author
Checked By	Checker

A101

Scale 3/32" = 1'-0"

5/9/2024 7:08:42 PM

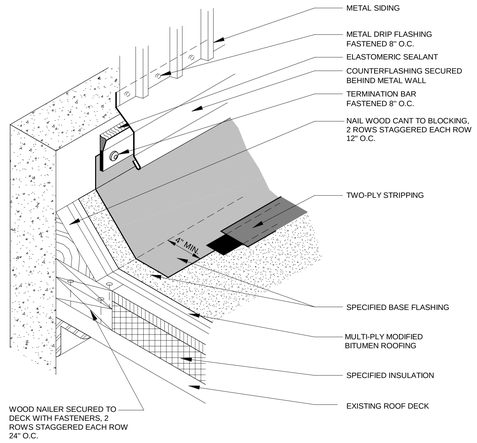

7 METAL WALL FLASHING
NOT TO SCALE

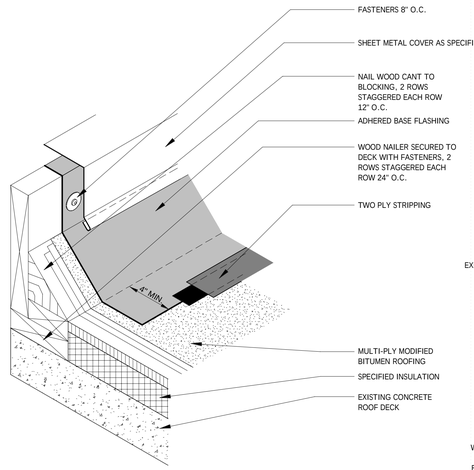

4 EQUIPMENT WOOD CURB
NOT TO SCALE

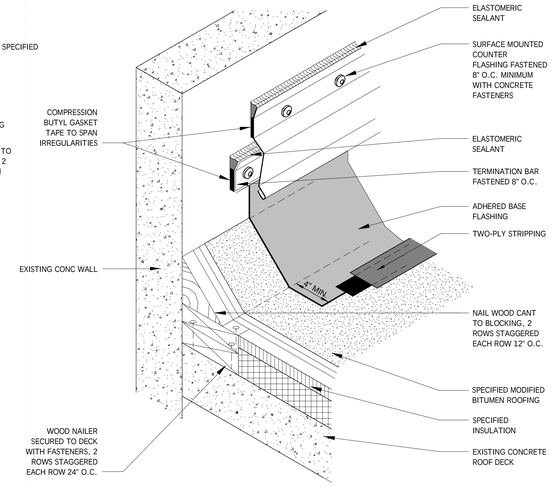

1 CONCRETE WALL FLASHING
NOT TO SCALE

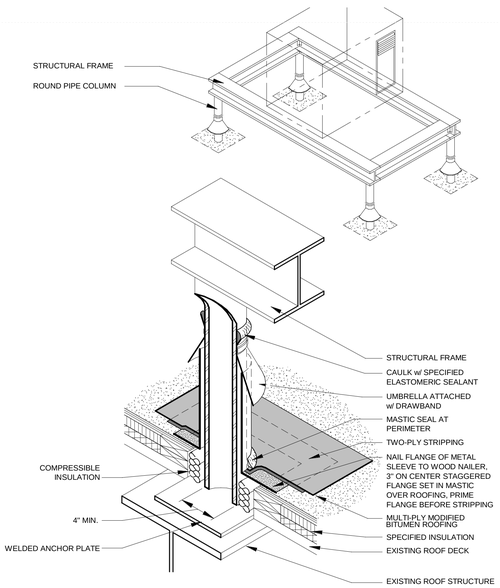

11 EQUIPMENT STAND
12" = 1'-0"

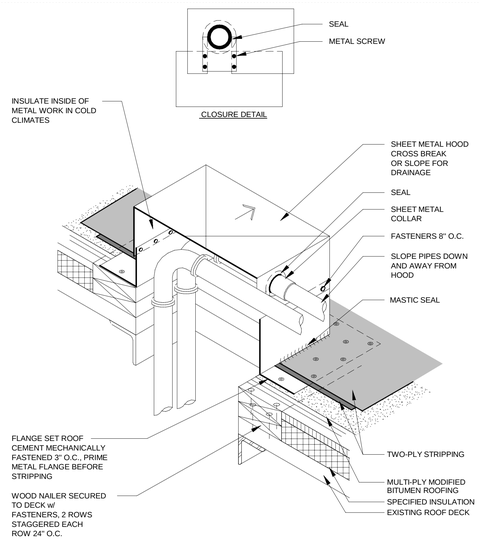

8 CONDUIT / PIPING THRU ROOF DECK
NOT TO SCALE

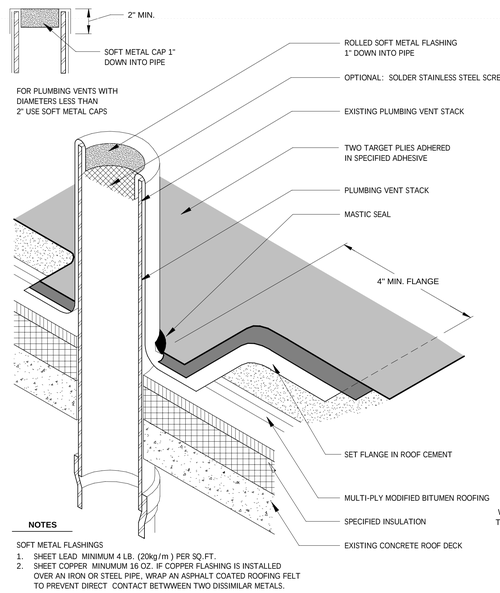

NOTES

SOFT METAL FLASHINGS
1. SHEET LEAD MINIMUM 4 LB. (20kg/m) PER SQ.FT.
2. SHEET COPPER MINUMUM 16 OZ. IF COPPER FLASHING IS INSTALLED OVER AN IRON OR STEEL PIPE, WRAP AN ASPHALT COATED ROOFING FELT TO PREVENT DIRECT CONTACT BETWWEEN TWO DISSIMILAR METALS.

5 PLUMBING VENT FLASHING
NOT TO SCALE

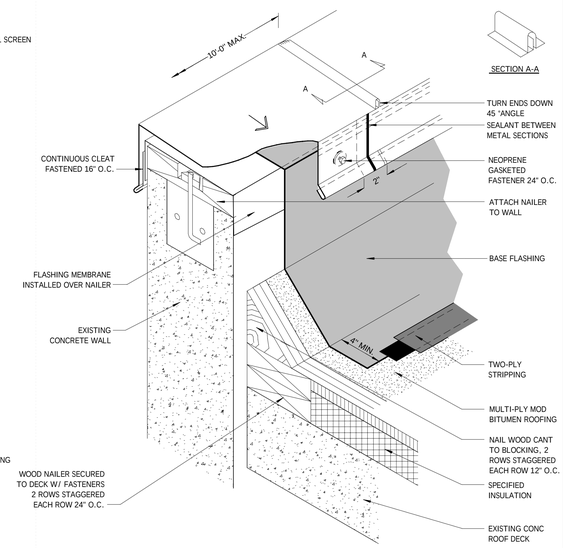

2 METAL COPING CAP
NOT TO SCALE

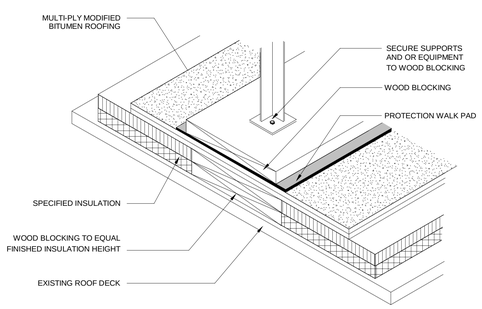

9 LOAD BEARING SUPPORT
NOT TO SCALE

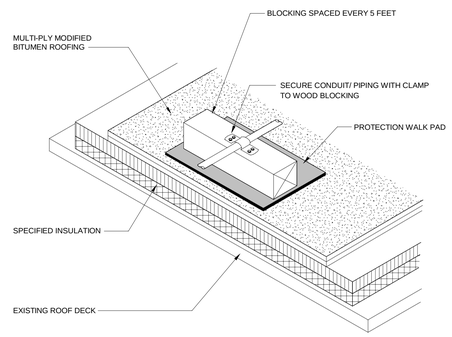

6 CONDUIT / PIPE SUPPORT
NOT TO SCALE

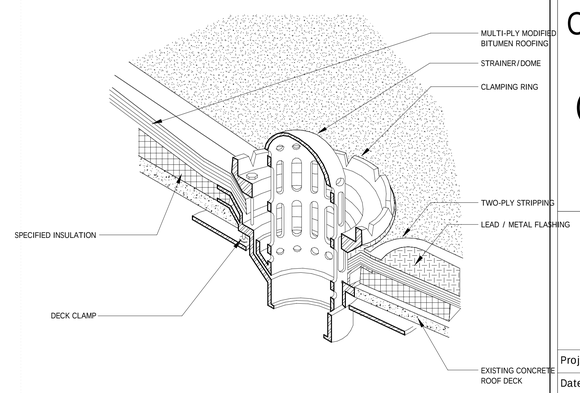

NOTES

1. PRIME ALL METAL SURFACES THAT WILL COME INTO CONTACT WITH ADHESIVES.

3 ROOF DRAIN
NOT TO SCALE

No.	Description	Date

Windemere Condominiums Roof Replacement (Buildings One and Two)

ROOF DETAILS

Project Number	Project Number
Date	Issue Date
Drawn By	Author
Checked By	Checker

A501

Scale 12" = 1'-0"

5/9/2024 7:08:45 PM

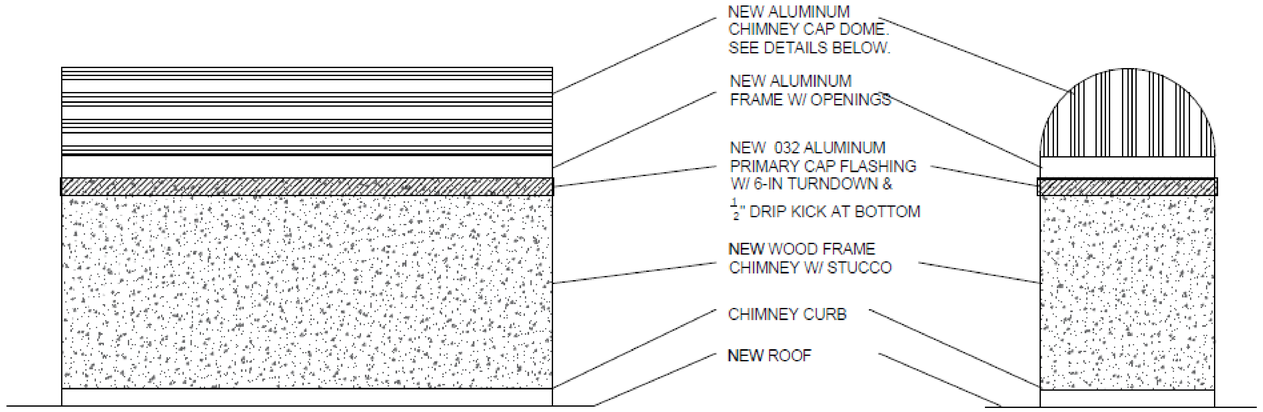

CHIMNEY SIDE ELEVATION
SCALE: NONE

CHIMNEY END ELEVATION
SCALE: NONE

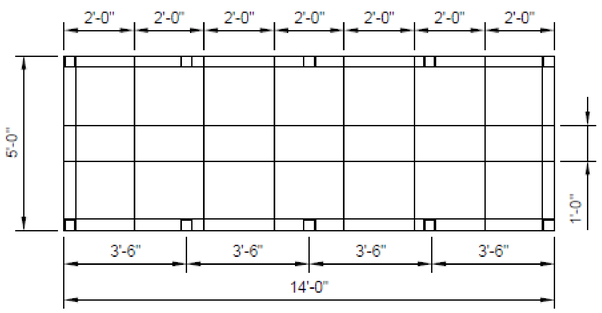

CHIMNEY CAP PLAN
SCALE: NONE

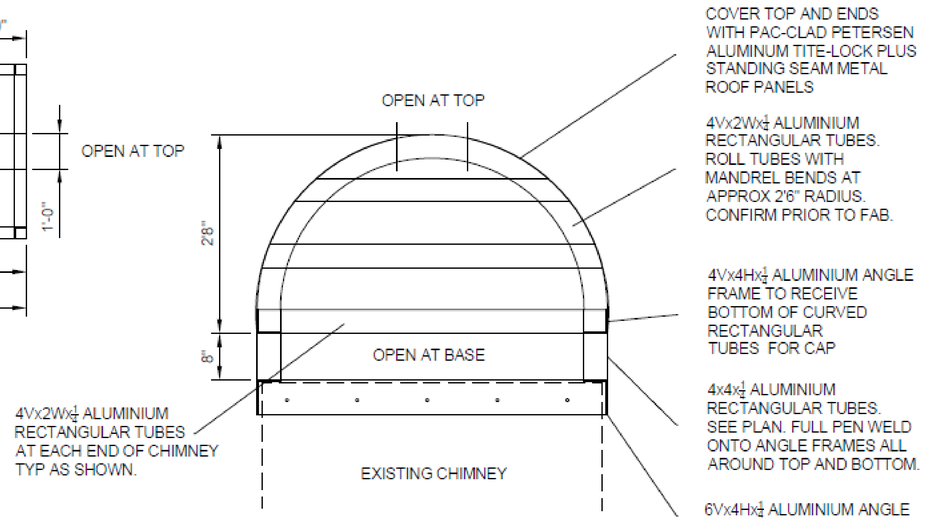

CHIMNEY SECTION DETAIL
SCALE: NONE

NOTES
1. THE FRAME MEMBERS SHOWN ABOVE ARE ALUMINUM RECTANGULAR TUBES 4" HIGH X 2" WIDE X 1/4" WALL THICKNESS.
2. FRAME DETAILS AS SHOWN ON PLANS.
3. GRIND ALL WELDS SMOOTH BEFORE POWDER COATING.
4. FIELD VERIFY ALL DIMENSIONS PER NOTES ON SHEET S1 PRIOR TO FABRICATION.

1 WINDEMERE CONDOMINIUMS CHIMNEY DETAILS

No.	Description	Date

Windemere Condominiums Roof Replacement (Buildings One and Two)

CHIMNEY DETAILS

Project Number	Project Number
Date	Issue Date
Drawn By	Author
Checked By	Checker

A701

5/9/2024 7:08:42 PM